CISA®

ALLEGION®

EN Installation and User Manual
CISA MyEVO Lock

cisa.com

CONTENTS

INSTALLATION

DIMENSIONS

Lock 6
Accessories 7

ELECTRICAL DRAWINGS

General overviews 8
Wiring diagrams 10
Connecting a remote contact and the Door Status device 11

INSTALLATION

CISA MYEVO button 06525.50 12
CISA MYEVO button 06525.51 13
CISA MYEVO keypad 06525.50 14
CISA MyEVO keypad/RFID 06525.71/73/75 15
Pair of Door Status contacts 16
Battery holder 17
Cylinder 18
Changing hand 18

OPERATION

CISA MYEVO BUTTON

Using the CISA MYEVO button 20
Opening the door 20
Closing the door when the lock is in semi-automatic mode 21
Changing the lock operating mode 22
Warning dead batteries 23
Warning malfunction 23
Assistance and FAQ 23

EXTERNAL KEYPAD

Using the CISA MYEVO keypad 24
Construction mode 24
Master Code 25
Creating a new Master Code 25
Establishing the length of User Codes 25
Creating a new User Code 26
Opening the door 26
Deleting a User Code 27
Deleting all User Codes 28
Changing the lock operating mode 28

Closing the door when the lock is in semi-automatic mode 29
Disabling the CISA MYEVO button and any other device connected by remote contact 29
Restoring factory set-up 29
Warning dead batteries 30
Warning malfunction 30
Assistance and FAQ 30
Using the CISA MYEVO RFID reader 31
Types of cards 31
Construction mode 32
Master Card 32
Associating the CISA MYEVO RFID reader with the lock 32
Enabling a User Card or a mini User Card 33
Opening the door 33
Disabling a User Card or mini User Card 33
Enabling a Change or Safe Card 33
Using the Change Card 34
Using the Safe Card 34
Disabling a Change or Safe Card 35
Disabling all the User Cards or mini User Cards, the Change Card and the Safe Card 35
Closing the door when the lock is in semi-automatic mode 35
Dissociating the CISA MYEVO RFID reader from the lock and restoring factory settings 36
Warning dead batteries 37
Warning malfunction 37
Incorrect card 37
Assistance and FAQ 37

GENERAL INFORMATION

Batteries and consumption 38
Remote opening 38
Cleaning 38
Replacing the CISA MYEVO RFID reader 38
Warning door ajar 38
Firmware 38
Assistance and FAQ 39
Certifications 39
Disposal of electric and electronic components 39

GENERAL DESCRIPTION

The MyEVO lock is the ideal solution to ensure your home, office, professional premises or business are safe and protected.
MyEVO is a smart motorised lock for armoured doors which automatically locks when the door is closed and can be operated by a variety of accessories including a button, numerical keypad or RFID card reader. It also comes with an additional connection for devices that can provide an opening signal, such as a biometric reader or simply the property's intercom button.
MyEVO is also a mechanical lock so can be operated normally using a Euro cylinder. Furthermore, MyEVO offers the same resistance and protection against forced entry as CISA locks for armoured doors.
To meet the many requirements of users, MyEVO can be programmed to work in three different modes: ***AUTOMATIC, SEMI-AUTOMATIC, HOLD OPEN***.

AUTOMATIC:

when the door is shut, the latchbolt and deadbolts automatically engage so the door is securely locked. This is the factory set-up.

SEMI-AUTOMATIC:

when the door is shut, only the latchbolt automatically engages, while the deadbolts do not. When in this mode, the door can also be opened with just the handle.

HOLD OPEN:

when the door is shut, the latchbolt and deadlocks do not engage. The door is always open.

The RFID reader will not work if placed in direct contact with a metal panel. The antenna of the RFID reader must be at least 5 mm and no more than 20 mm from the metal surface behind the door panel.

INSTALLATION

INTRODUCTION

This manual is an integral part of the product and has been compiled by the manufacturer to provide everyone authorised to interact with it with the information they may need. Keep this manual in an easily accessible place for the working life of the product and make sure everyone knows where it is. The manufacturer reserves the right to make changes to this manual without prior notice.

PERSONAL SAFETY WARNING

If the **CISA MyEVO keypad** is installed, the **factory set *MASTER CODE MUST BE REPLACED*** and A NEW MASTER CODE CREATED (PAGE 25)
If the **CISA MyEVO RFID reader** is installed, it must be ASSOCIATED WITH THE LOCK (PAGE 32)

SAFETY REGULATIONS

Read the instructions in the installation and user manual carefully.
All installation and maintenance operations which require precise technical expertise or particular skills must be carried out exclusively by qualified personnel with the relevant qualifications and experience in the sector.

The deadbolts must engage and disengage freely. If this mechanism is in any way hindered, it may compromise the product's performance.

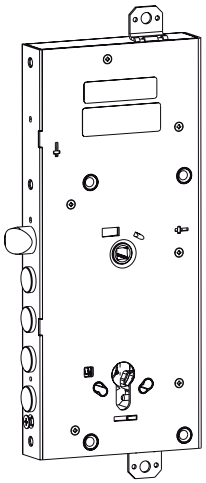

E6516

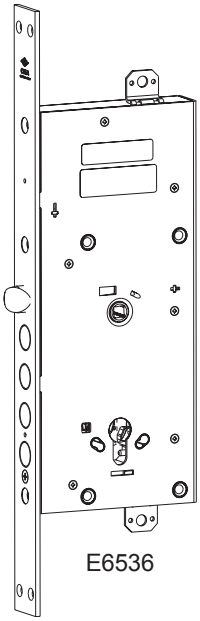

E6536

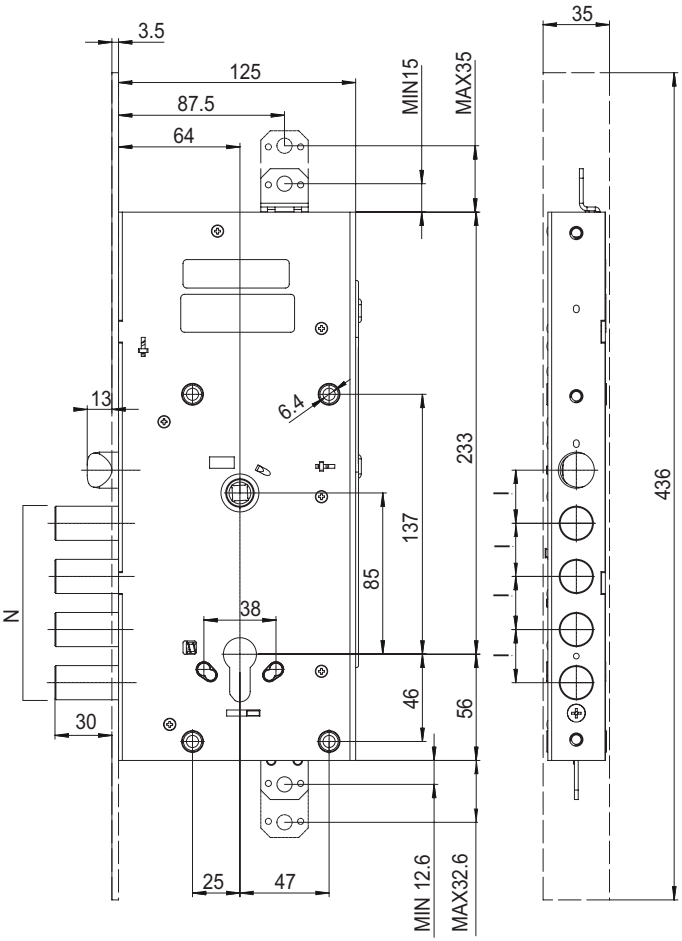

① Motorised lock

code	Centre distance deadbolts **I**	Number deadbolts **N**	Type of application
E6516280	28	4	Rim
E6516380	38	3	Rim
E6536280	28	4	Mortice

ACCESSORIES

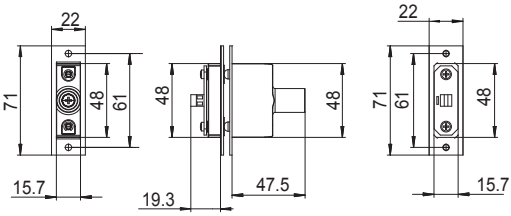

② Pair of Door Status contacts

code
0651050

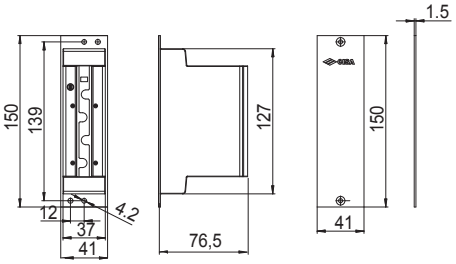

③ Battery holder

code
07030 80

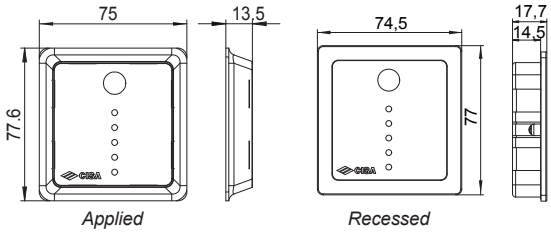

Applied *Recessed*

④ Button group

code	Type of application	RFID
06525 50	Applied	NO
06525 51	Recessed	NO

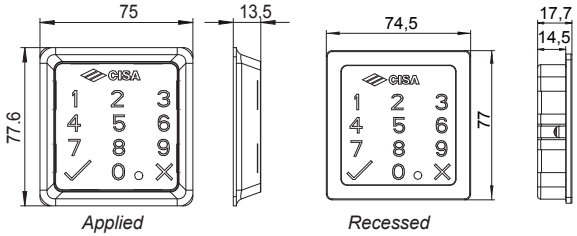

Applied *Recessed*

⑤ Keypad group

code	Type of application	RFID
06525 70	Applied	NO
06525 71	Recessed	NO
06525 73	Recessed	YES

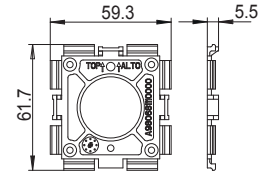

Bracket for rim accessories

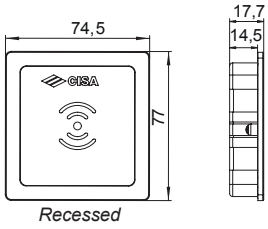

Recessed

⑤ RFID group

code	Type of application	RFID
06525 75	Recessed	YES

GENERAL OVERVIEWS

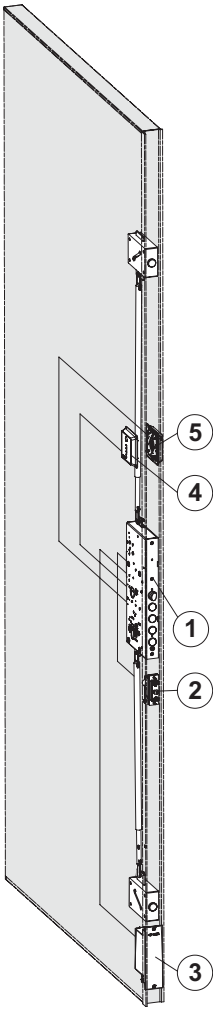

Power supply with disposable batteries

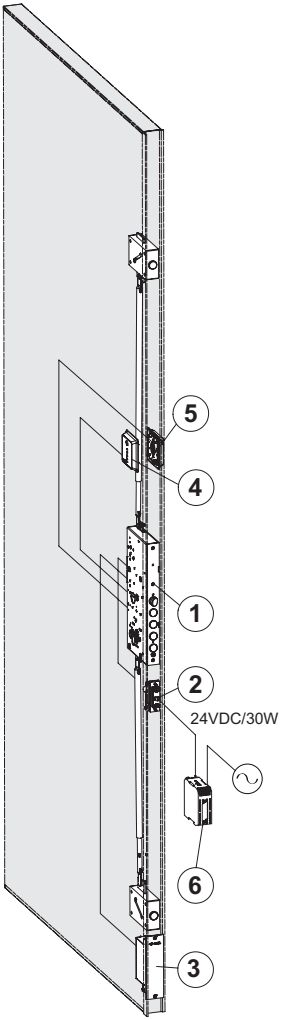

Powered by mains with power supply and rechargeable batteries

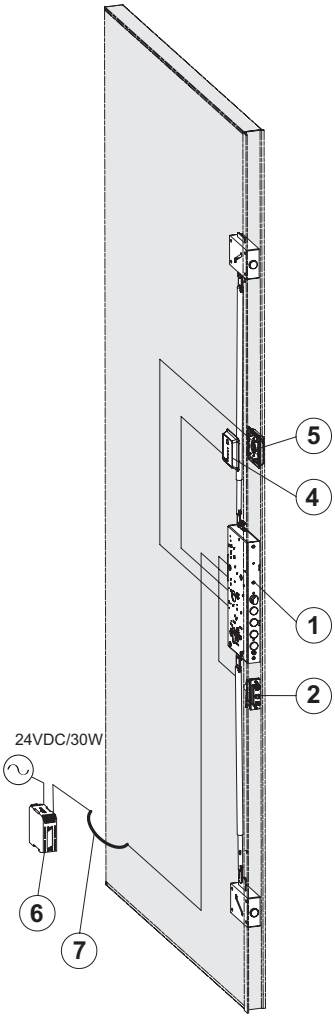

Powered by mains with power supply

To connect a device for remote opening, consult the section
CONNECTING A REMOTE CONTACT AND THE DOOR STATUS DEVICE (PAGE 11)

KEY:

1. MyEVO motorised lock
2. Pair of Door Status contacts
3. Battery holder
4. Button group
5. Keypad/RFID group
6. Power supply: INPUT V: 180-264 V; 50-60 Hz; 0.7 A - OUTPUT V: 24 V ⎓; 1.3 A
   Connect the power supply to the lock with a cable with a max. length of 3 m
   The 24V power supply must be protected with a 1.6A fuse 250V type F1.6 A
   CE marked, in compliance with Directives 2014/30/EU, 2014/35/EU
   Class 2 (double isolation)
   LPS source (in compliance with IEC 60950)
   OVP (for overvoltages) and OCP (for overcurrents) protection
   SELV
   UL94-V0 plastic
   Product UL Listed or at least UL Recognized
7. Cable guard

SAFETY REGULATIONS

- The electric system must comply with regulations in force.
- Always disconnect the electric system from the mains when connecting the cables or performing any later work on the lock.
- Do not power the lock directly from the mains but use a power supply recommended by the manufacturer.
- Protect the system appropriately against short circuits.
- Use the cables supplied with the lock and its accessories only.

CISA declines all responsibility for damage resulting from the failure to observe the above warnings or when accessories are not used as described in this manual.

WIRING DIAGRAMS

CONFIGURATION WITH DISPOSABLE BATTERIES

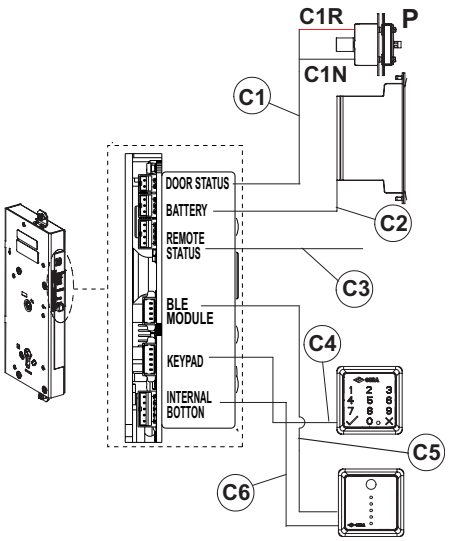

CONFIGURATION WITH MAINS POWER SUPPLY AND RECHARGEABLE BATTERIES

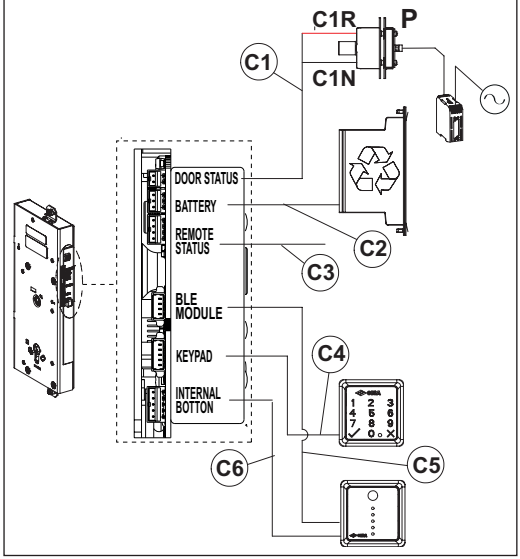

CONFIGURATION WITH MAINS POWER SUPPLY

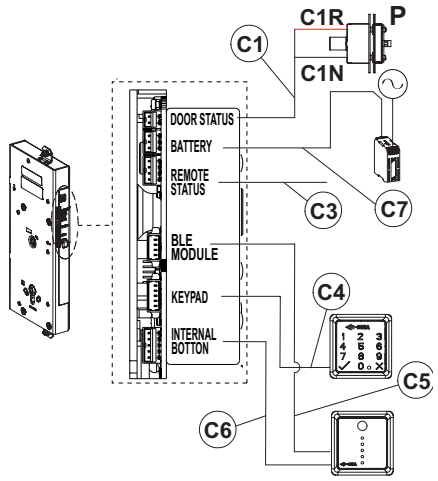

KEY:

C1	Door Status cable supplied with pair of Door Status contacts
C1R	Cable C1 red wire
C1N	Cable C1 black wire
P	Positive (+)
C2	Battery holder cable supplied with battery holder
C3	Cable for remote opening item 07230 72 to be ordered separately
C4	Keypad cable supplied with keypad group
C5	BLE cable (Bluetooth Low Energy) supplied with button group
C6	Button cable supplied with button group
C7	Power supply cable item 07030 70 to be ordered separately

Connect the cables to the lock referring to the diagram on the label on each of the connectors.

The BLE cable (C5) must be connected even if the "BLE button" is not fitted, as it may be used by authorised CISA technicians.

CONNECTING A REMOTE CONTACT AND THE DOOR STATUS DEVICE

REMOTE OPENING

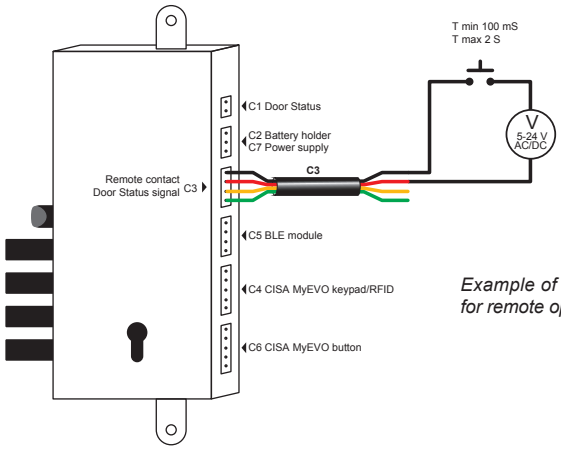

N.B.: in SEMI-AUTOMATIC MODE only, the lock can be locked, closing the circuit for 3 - 5 seconds

Example of button or relay connection for remote opening.

DOOR STATUS SIGNAL

⚠ *The Door Status signal is available only when the lock is in* ***AUTOMATIC MODE****.*

Contact open (no signal):
The door is locked and the second throw of the deadbolts is engaged

Contact closed (signal):
The door is open and/or the deadbolts are retracted

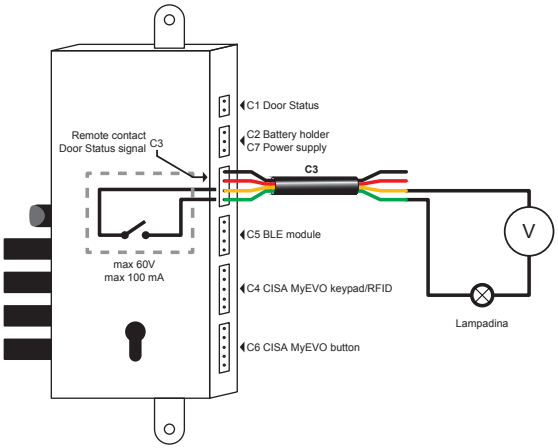

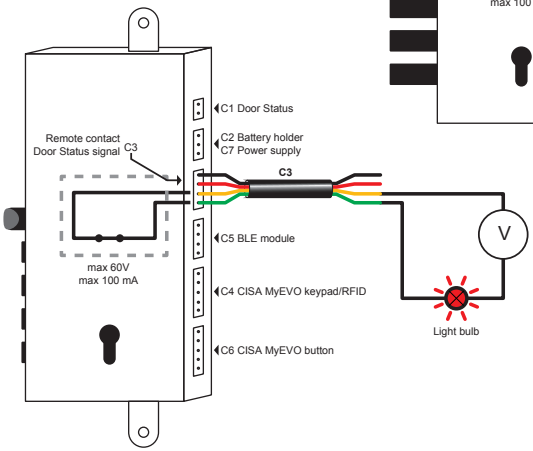

Example of connection of light bulb

CISA MYEVO BUTTON 06525.50

1. Screw the plate (4A) onto the door in the direction indicated ↑ Top-Alto on it.
2. Pass both the button cable (C6) and the BLE cable (C5) through the hole (the BLE cable is used to connect the BLE module, if fitted, or allows technical staff to carry out assistance if necessary).
3. Connect the button cable (C6) to the button (4B).
4. Connect the BLE cable (C5) to the BLE module (only for the BLE versions).
5. Clip the button (4B) onto the fixing plate (4A).

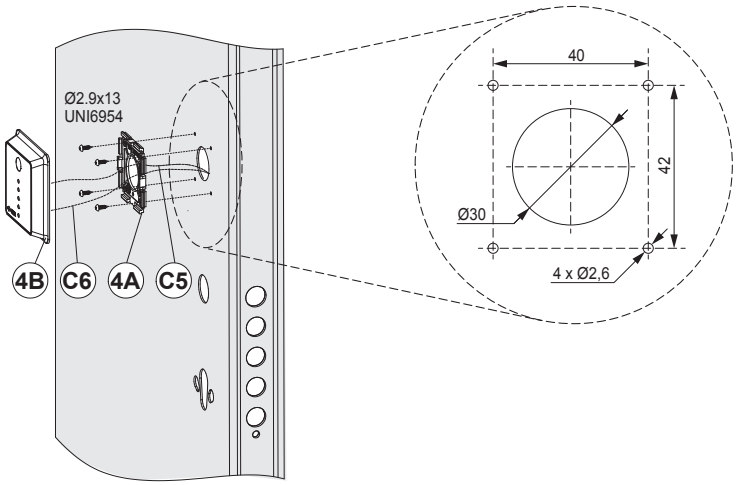

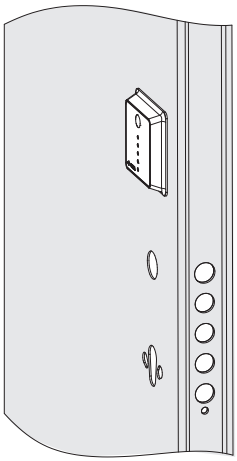

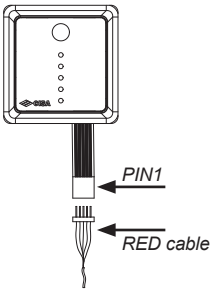

Clean the surface with a damp cloth, do NOT use chemical solvents

CISA MYEVO BUTTON 06525.51

To carry out this installation, the panel must be at least 5 mm thick.

1. Make a hole in the panel, respecting the tolerances indicated in the drawing.
2. Place the bracket (4A) in the hole in the direction indicated ↑ Top-Alto on it, making sure the four flaps adhere to the panel. Screw in the dowel (G) until the bracket is secured into place. An adhesive may be used to ensure the bracket is completely secure and should be applied as shown(💧). CISA recommends Loctite® flexible adhesive.
3. Pass both the button cable (C6) and the BLE cable (C5) through the hole (the BLE cable is used to connect the BLE module, if fitted, or to upgrade the firmware if necessary).
4. Connect the button cable (C6) to the button (4B).
5. Connect the BLE cable (C5) to the BLE module (only for the BLE versions).
6. Insert the button (4B) into the bracket (4A) and secure it into position by pulling it downwards.

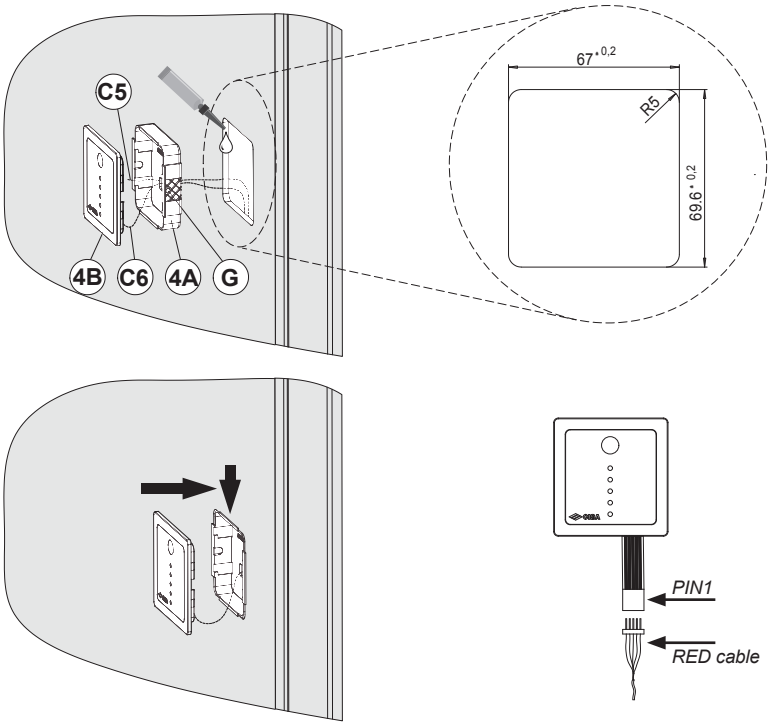

Clean the surface with a damp cloth, do NOT use chemical solvents

CISA MYEVO KEYPAD 06525.50

1. Screw the plate (5A) onto the door in the direction indicated ↑ Top-Alto on it.
2. Pass the keypad cable (C4) through the hole.
3. Connect the keypad cable (C4) to the keypad (5B).
4. Clip the keypad (5B) to the fixing plate (5A).

The fixing screws must be screwed into a metal part of the door.

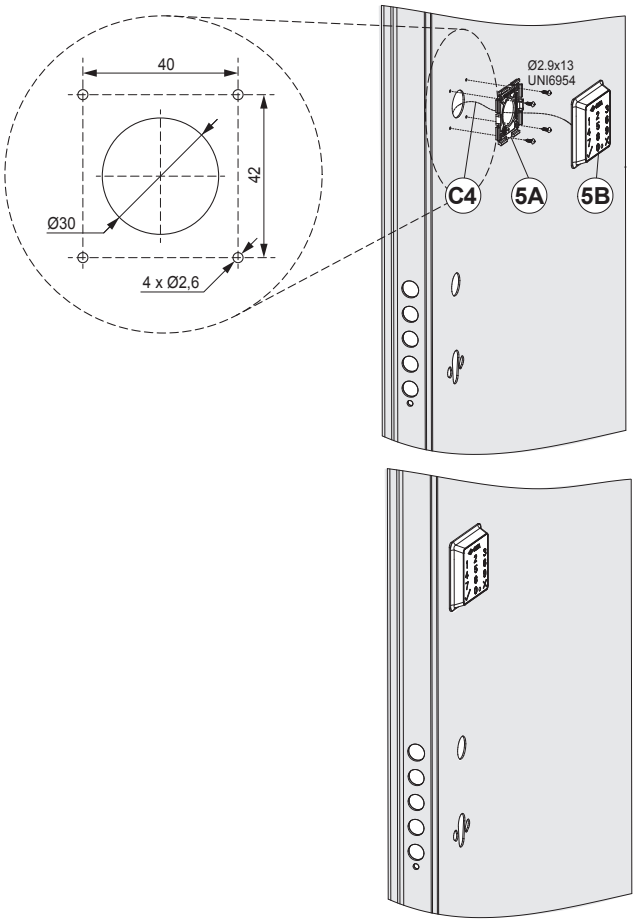

Clean the surface with a damp cloth, do NOT use chemical solvents

CISA MYEVO KEYPAD/RFID 06525.71/73/75

To carry out this installation, the panel must be at least 5 mm thick.

1. Make a hole in the panel, respecting the tolerances shown in the drawing.
2. Place the bracket (5A) in the hole in the direction indicated ↑ and Top-Alto on it, making sure the four flaps adhere to the panel. Screw in the dowel (G) until the bracket is secured into place. An adhesive may be used to ensure the bracket is completely secure and should be applied as shown(💧). CISA recommends Loctite® flexible adhesive.
3. Connect the keypad cable (C4) to the keypad (5B).
4. Insert the keypad (5B) into the bracket (5A) and secure it into position by pulling it downwards.

The RFID reader will not work if placed in direct contact with a metal panel. The antenna of the RFID reader must be at least 5 mm and no more than 20 mm from the metal surface placed behind the door panel.

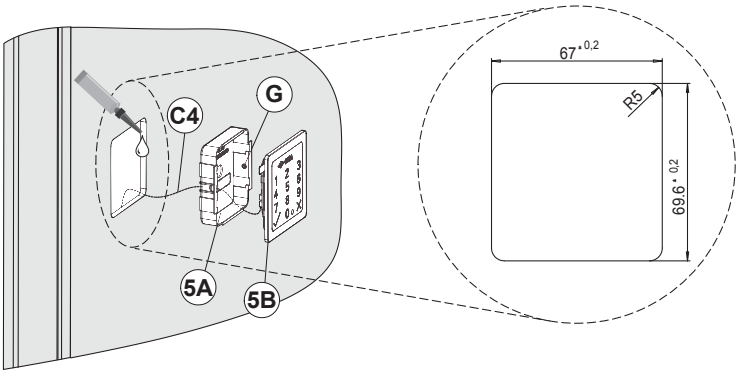

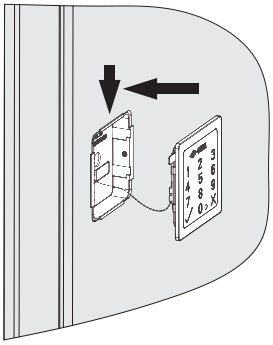

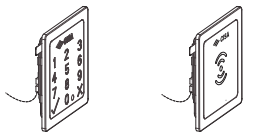

06525.71.73 *06525.75*

Clean the surface with a damp cloth, do NOT use chemical solvents

PAIR OF DOOR STATUS CONTACTS

1. Place the door side Door Status device in position, making sure the red cable C1R is at the top (Fig. 1).
2. Place the frame side Door Status device in position, making sure the letter P (positive pole) is at the top (Fig. 1).
3. By turning the adjusting screws, adapt the position of the Door Status device to the clearance between the door leaf and the frame (Fig. 2)
   N.B.: the door and frame must not touch as the contacts connect magnetically.
4. Position the Door Status device as shown in Fig. 3.
5. When configured with mains power supply and rechargeable batteries, use the power supply recommended by the manufacturer only.

The electric cable which connects the power supply to the Door Status device must respect the polarity indicated on the Door Status device with the P for "positive" at the top .
If the polarity is not respected, the rechargeable batteries will not charge

When configured with rechargeable batteries, the initial total voltage of the battery pack must be greater than 12 volt, otherwise the batteries will not charge.

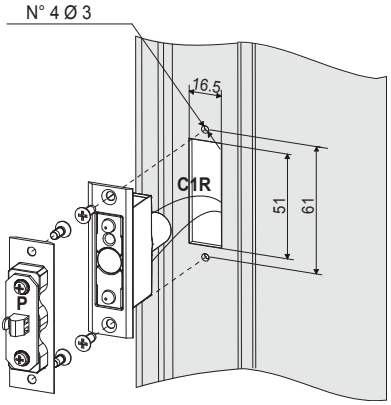

Fig. 1

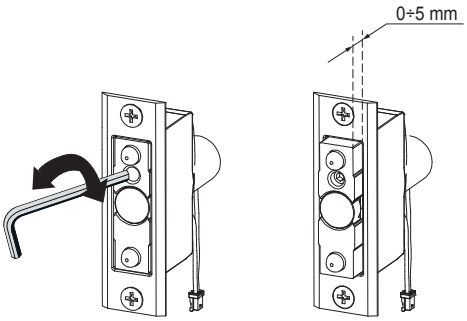

Fig. 2

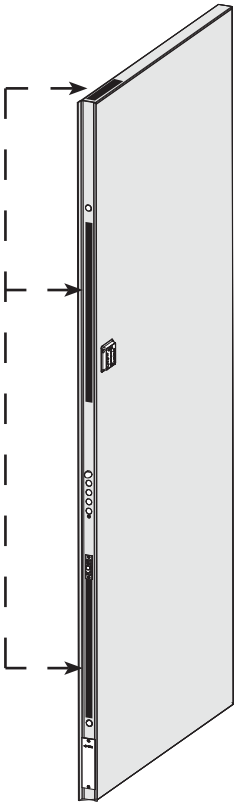

Fig. 3

BATTERY HOLDER

1. When configured with disposable batteries, use 12 disposable AA 1.5 V batteries 1800 mA (Fig. 1). Lithium batteries are recommended for a longer life.
2. When configured with rechargeable batteries, use 12 rechargeable AA 1.2 V batteries 1800 mA (Fig. 1).
3. The battery holder can be installed on either the edge of the door or at the top as shown, or on the hinge side after checking that the opening angle of the door is wide enough to allow the batteries to be removed (Fig. 2).

Make sure cables do not touch metal parts.

When configured with rechargeable batteries, make sure there are rechargeable batteries in the battery pack. Caution: risk of explosion if the batteries are replaced with the wrong kind. Always follow instructions when disposing of batteries.

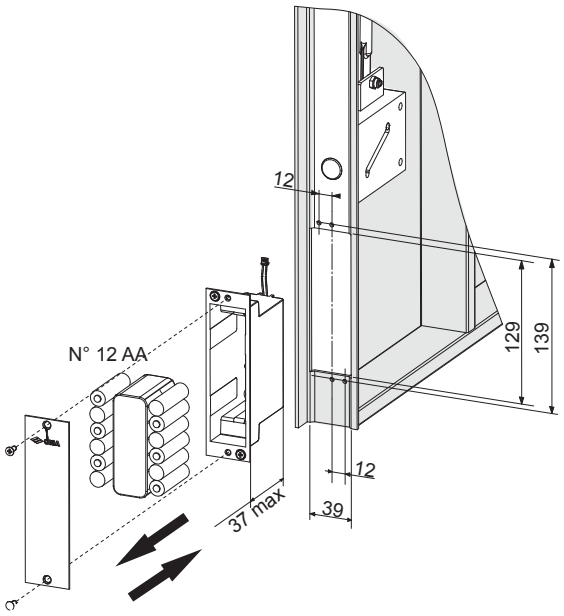

Fig. 1

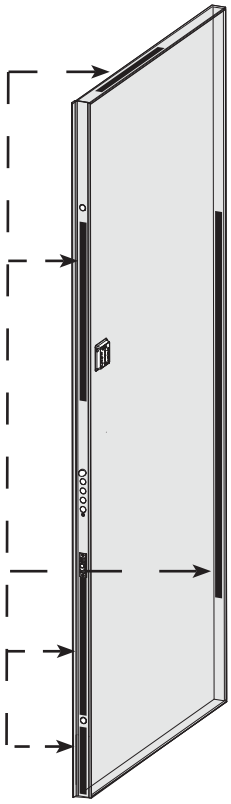

Fig. 2

CYLINDER

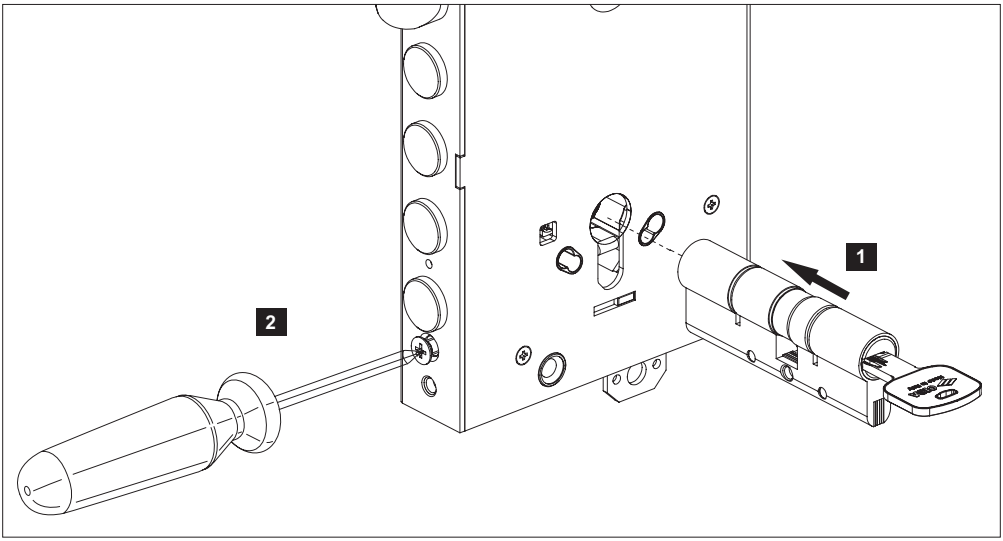

Always install cylinders with a key-key clutch.

CHANGING HAND

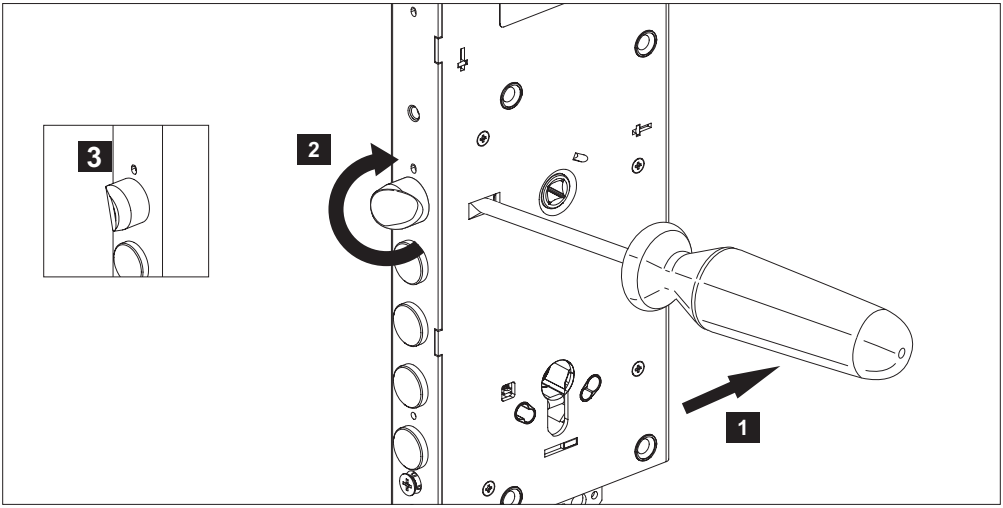

OPERATION

INTRODUCTION

This manual is an integral part of the product and has been compiled by the manufacturer to provide everyone authorised to interact with it with the information they may need. Keep this manual in an easily accessible place for the working life of the product and make sure everyone knows where it is. The manufacturer reserves the right to make changes to this manual without prior notice.

PERSONAL SAFETY WARNING

If the **CISA MyEVO keypad** is installed, the factory set Master Code must be replaced and A NEW MASTER CODE CREATED (PAGE 25)
If the **CISA MyEVO RFID reader** is installed, it must be ASSOCIATED WITH THE LOCK (PAGE 32)

SAFETY REGULATIONS

Read the instructions in the installation manual carefully.
All installation and maintenance operations which require precise technical expertise or particular skills must be carried out exclusively by qualified personnel with the relevant qualifications and experience in the sector.

The deadbolts and rods must engage and disengage freely. If this mechanism is in any way hindered, it may compromise the product's performance.

USING THE CISA MYEVO BUTTON

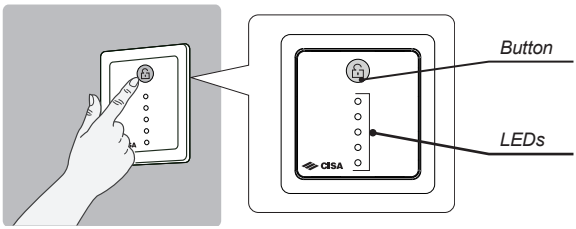

The CISA MyEVO button is an accessory which is installed on the door panel, inside the house. For obvious safety reasons, never install it outside.
The button has the following functions:

- It allows the door to be opened
- It allows the door to be closed when the lock is in semi-automatic mode
- It allows the user to configure the lock operating mode
- It produces light signals

OPENING THE DOOR

Press the button: the deadbolts and latchbolt are withdrawn into the lock. During this stage, the LEDS on the button light up in sequence. The LEDS go off when the door is open.

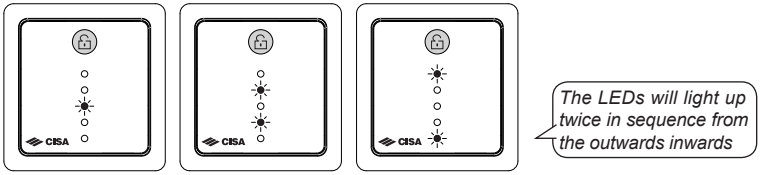

N.B.: when the door is being closed, the LEDs light up in sequence and, once it has been closed, they go off.

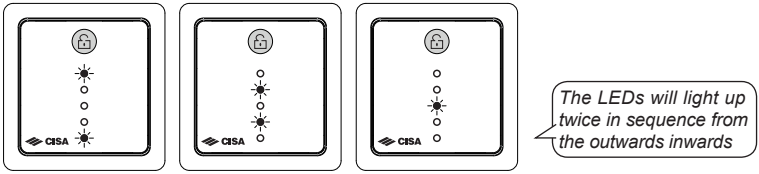

CLOSING THE DOOR WHEN THE LOCK IS IN SEMI-AUTOMATIC MODE

In ***SEMI-AUTOMATIC*** mode, when the door is shut only the latchbolt automatically engages, while the deadbolts do not. In this mode, the door can also be opened with just the handle.
It is possible to completely lock the door by engaging the deadbolts as follows.

⚠ *The door must be locked (latchbolt only)*

Press the button and hold it down for at least 3 seconds: the deadbolts engage and the door is completely locked.

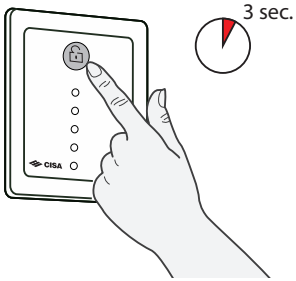

When the door is being closed, the LEDs light up in sequence and, once it has been closed, they go off.

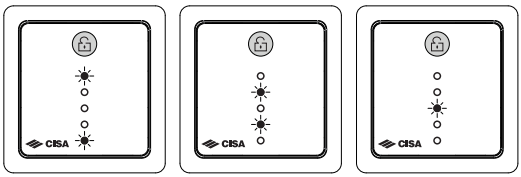

The LEDs will light up twice in sequence from the outwards inwards

CHANGING THE LOCK OPERATING MODE

The lock is factory set in automatic mode. It can be set in 3 different modes: ***AUTOMATIC, SEMI-AUTOMATIC, HOLD OPEN.***

The door must be open

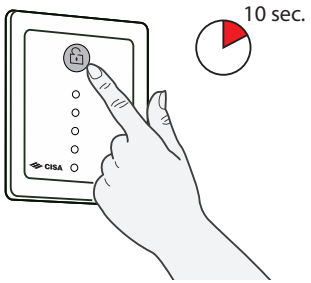

Press the button and hold it down for at least 10 seconds.
It is now possible to configure the lock:

The LEDs light up to indicate the following:

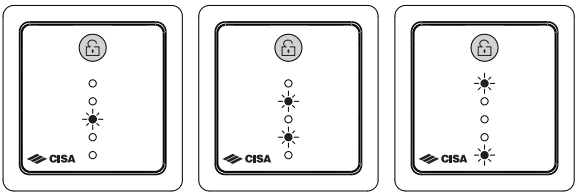

Automatic *Semi-automatic* *Hold open*

One central LED: the lock is set to automatic mode;
Two intermediate LEDs: the lock is set to semi-automatic mode;
Two external LEDs: the lock is set to hold open mode.

Once in the lock setting mode, it is possible to move from one mode to another by simply pressing the button: each time it is pressed it goes sequentially from automatic mode to semi-automatic mode, from semi-automatic mode to hold open mode, from hold open mode to automatic mode and so on.

Wait a couple of seconds for the lock to set in the selected mode.

WARNING DEAD BATTERIES

When the batteries are dead, every time the lock is activated by either the button or any other external accessory, all the LEDs will light up and flash 5 times.
This indicates the batteries are dead and need to be replaced as soon as possible.

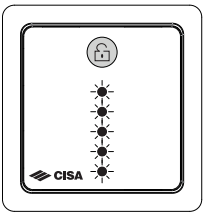

If the batteries are dead, when the button is pressed all the LEDs will light up and flash 5 times

WARNING MALFUNCTION

If there is a mechanical malfunction, all the LEDs will light up and flash 10 times.

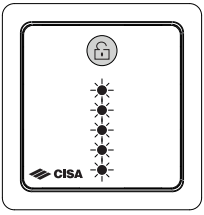

All the LEDs flash 10 times

ASSISTANCE AND FAQ

If you have any doubts or queries, visit the page on the CISA website:
cisa.com/myevo

USING THE CISA MYEVO KEYPAD

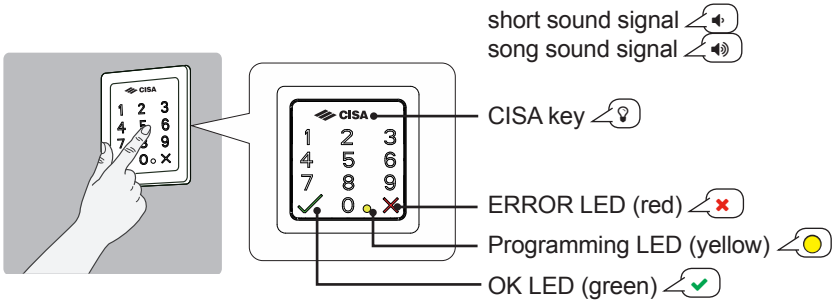

The **CISA MyEVO keypad** is an accessory which is installed on the door panel and has the following functions:

- It allows the user to open the door
- It allows the door to be closed when the lock is in semi-automatic mode
- It allows the user to configure the lock operating mode
- It produces light signals

PERSONAL SAFETY WARNING

If the **CISA MyEVO keypad** is installed, **the factory set *MASTER CODE* must be replaced** and A NEW MASTER CODE CREATED (PAGE 25) to become the sole administrator of the door and exit CONSTRUCTION MODE.

CONSTRUCTION MODE

This mode allows door manufacturers to test the door and installers to fit it easier on site. When a MyEVO lock and its accessories (keypad/RFID) are purchased, it is in ***CONSTRUCTION MODE***. In this mode it is possible to:

- Open the door by entering the factory set **Master Code**, 12345678
- Open the door by holding the **Master Card** up to the RFID reader
- Open the door by holding any **User Card** up to the RFID reader

To exit***CONSTRUCTION MODE,*** do one of the following:

- **Create a new Master Code** for the keypad (only the new Master Code will open the lock)
- **Create a new User Code** for the keypad (only the new User Code will open the lock)
- **Associate the RFID reader** with the MyEVO lock (only the Master Card will open the lock)

MASTER CODE

The **Master Code** is an 8-digit code which allows users to:

- open the door when it is locked
- programme the CISA MyEVO keypad and lock when the door is open.

The CISA MyEVO keypad has a factory set **Master Code**: 12345678

The CISA MyEVO keypad is supplied with a card with the factory set **Master Code** (FACTORY MASTER CODE) and a space for users to write the new Master Code (PERSONAL MASTER CODE). This card is purely a reminder for the door administrator. **Please keep the card in a safe place**.

It is mandatory to create a new Master Code to become the sole administrator of the door and exit *CONSTRUCTION MODE.*

CREATING A NEW MASTER CODE

⚠ *It is not possible to create a **Master Code** which begins with **0000***

⚠ *This must be done with the DOOR OPEN.*

1. Press the CISA key to activate the keypad.
2. Enter the **Master Code**
   (FACTORY MASTER CODE 12345678 or PERSONAL MASTER CODE)
3. Press 5
4. Enter the **new 8-digit Master Code**
5. Re-enter the **new 8-digit Master Code**

ESTABLISHING THE LENGTH OF USER CODES

User Codes can have a minimum of 4 and a maximum of 8 numbers (the factory code has 4 numbers).
Once the length has been set, all User Codes generated must be of the same length.
It is not possible to create several User Codes of different lengths.

It is possible to change the length of the User Code only if no codes have been set. If codes have already been set, follow the procedure DELETING ALL USER CODES (PAGE 28)
It will then be possible to continue as follows:

⚠ *This must be done with the DOOR OPEN.*

1. Press the CISA key to activate the keypad
2. Enter the **Master Code** of 8 digits
3. Press 4
4. Enter the desired numbers (4 - 8)

CREATING A NEW USER CODE

⚠ *It is not possible to create a User Code which begins with **0000** or a User Code which begins with the same sequence of numbers which the **Master Code** begins with.*

It is possible to store up to 30 User Codes at the same time.
It is possible to delete and create a new User Code an infinite number of times.

⚠ *This must be done with the DOOR OPEN.*

1. Press the CISA key to activate the keypad
2. Enter the **Master Code** of 8 digits
3. Press 1
4. Enter the User Code
5. Re-enter the User Code

OPENING THE DOOR

The door may be opened using the User Code in one of the following ways:

- Enter the User Code directly
- Enter the User Code in scramble mode

OPENING THE DOOR BY ENTERING THE USER CODE DIRECTLY

1. Press the CISA key to activate the keypad
2. Enter the User Code
3. The deadbolts and latchbolt will retract and the door can be opened.

If the door is not opened in 10 seconds, it will lock again. It is not possible to deactivate or modify this action.

⚠ *If the yellow and green LEDs flash twice before the door is opened, it means A NEW MASTER CODE MUST BE CREATED (PAGE 25)*

OPENING THE DOOR BY ENTERING THE USER CODE IN SCRAMBLE MODE

When the User Code is entered in **scramble mode**, it can be protected from prying eyes because it is possible to enter up to 8 random numbers before the User Code. This makes it a lot more difficult for anyone in the vicinity to memorise the User Code.

N.B.: the CISA MyEVO keypad can accept up to 12 numbers, so if the User Code has 4 digits, the user can enter up to a maximum of 8 random numbers. If the User Code has 8 digits, the user can enter up to a maximum of 4 random numbers.
Follow these steps:

1. Press the CISA key to activate the keypad
2. Enter the code 0000 to activate the **scramble** mode
3. Enter the User Code preceded by an arbitrary number of figures; the total number of figures must be 12 or less
4. The deadbolts and latchbolt will retract and the door can be opened.

If the door is not opened in 10 seconds, it will lock again. It is not possible to deactivate or modify this action.

⚠ *If the yellow and green LEDs flash twice* *before the door is opened, it means A NEW MASTER CODE MUST BE CREATED (PAGE 25)*

INCORRECT CODE

If an incorrect User Code is entered, the CISA MyEVO keypad emits an error signal
After 3 consecutive error signals, the CISA MyEVO keypad stops working for 3 minutes.
When 3 minutes have elapsed, it is possible to enter the correct User Code.

DELETING A USER CODE

⚠ *This must be done with the DOOR OPEN.*

1. Press the CISA key to activate the keypad
2. Enter the 8-digit **Master Code**
3. Press 2
4. Enter the User Code to delete
5. Re-enter the User Code to delete

DELETING ALL USER CODES

⚠ *This must be done with the DOOR OPEN.*

1. Press the CISA key to activate the keypad
2. Enter the 8-digit **Master Code**
3. Press 3
4. Enter the **Master Code**

CHANGING THE LOCK OPERATING MODE

The lock is factory set to automatic mode. It can be set in 3 different modes: ***AUTOMATIC, SEMI-AUTOMATIC, HOLD OPEN***.

⚠ *This must be done with the DOOR OPEN.*

SETTING AUTOMATIC MODE:

1. Press the CISA key to activate the keypad
2. Enter the 8-digit **Master Code**
3. Press 7 to activate the automatic mode

Wait a couple of seconds for the lock to set in the selected mode.

SETTING SEMI-AUTOMATIC MODE:

1. Press the CISA key to activate the keypad
2. Enter the 8-digit **Master Code**
3. Press 8 to activate the semi-automatic mode

Wait a couple of seconds for the lock to set in the selected mode.

SETTING HOLD OPEN MODE

1. Press the CISA key to activate the keypad
2. Enter the 8-digit **Master Code**
3. Press 9 to activate the hold open mode

Wait a couple of seconds for the lock to set in the selected mode.

CLOSING THE DOOR WHEN THE LOCK IS IN SEMI-AUTOMATIC MODE

In semi-automatic mode, when the door is shut only the latchbolt automatically engages, while the deadbolts do not. In this mode, the door can also be opened with just the handle.
It is possible to completely lock the door by engaging the deadbolts as follows.

⚠ *The door must be locked (latchbolt only)*

1. Press the CISA key 3 times.

DISABLING THE CISA MYEVO BUTTON AND ANY OTHER DEVICE CONNECTED BY REMOTE CONTACT

⚠ *This operation can be dangerous if not in possession of the key.*

By disabling the button and any other device connected by remote contact, it is only possible to open the door from the inside with the key.
From the outside, however, it is possible to open the door using the CISA MyEVO keypad, the CISA MyEVO RFID reader , or the key.

DISABLING

⚠ *This must be done with the DOOR OPEN.*

1. Press the CISA key to activate the keypad
2. Enter the 8-digit **Master Code**
3. Press 6

RE-ENABLING

⚠ *This must be done with the DOOR OPEN.*

1. Press the CISA key to activate the keypad
2. Enter the 8-digit **Master Code**
3. Press 6

RESTORING FACTORY SET-UP

This procedure has the following consequences:

- All the User Codes are deleted
- The length of the User Code is 4 numbers
- The **Master code** goes back to the factory set code (FACTORY MASTER CODE: 12345678)
- The lock is factory set in automatic mode

This must be done with the DOOR OPEN.

1. Press the CISA key to activate the keypad
2. Enter the 8-digit **Master Code**
3. Press 0
4. Re-enter the 8-digit **Master Code**

If users do not remember their personal Master Code, it is possible to restore factory set-up following these steps:

This must be done with the DOOR OPEN.

1. Engage the deadbolts completely with the key
2. Press the CISA key on the keypad
3. Retract the deadbolts completely with the key
4. Engage the deadbolts completely with the key
5. Press 1
6. Press 9

WARNING DEAD BATTERIES

When the batteries are dead, every time the lock is activated by either the button or any other external accessory, all the LEDs will light up and flash 5 times. This indicates the batteries are dead and need to be replaced as soon as possible.

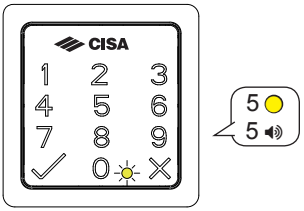

WARNING MALFUNCTION

If there is a mechanical malfunction, the red LED will light up and flash 10 times.

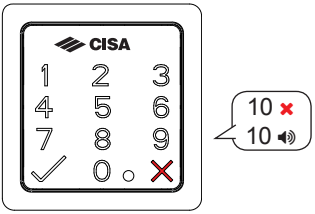

ASSISTANCE AND FAQ

If you have any doubts or queries, visit the page on the CISA website:
cisa.com/myevo

USING THE CISA MYEVO RFID READER

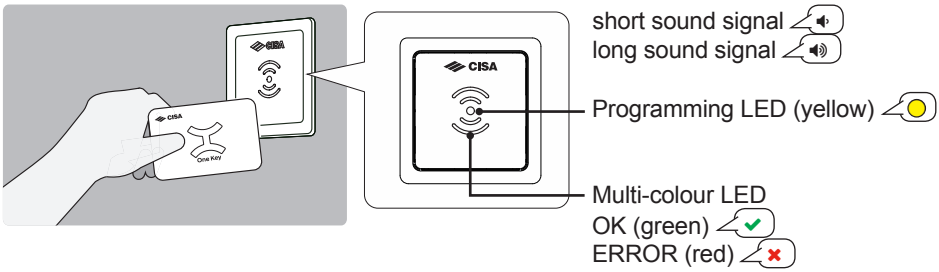

The RFID reader is an accessory which is installed on the door panel and has the following functions:

- It allows the door to be opened
- It allows the door to be closed when the lock is in semi-automatic mode
- It allows the user to configure the lock operating mode
- It produces light signals

TYPES OF CARDS

Mini User Card

Master Card

Change Card

User Card

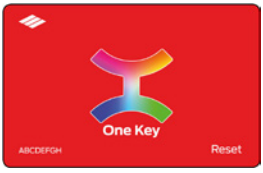

Reset Card

Safe Card

PERSONAL SAFETY WARNING

If the **CISA MyEVO RFID reader** is installed, it must be associated with the lock using the **Master Card**.
This is necessary to become the sole administrator of the door and exit ***CONSTRUCTION MODE***.

CONSTRUCTION MODE

This mode allows door manufacturers to test the door and installers to fit it easier on site. When a MyEVO lock and its accessories (keypad/RFID) are purchased, it is in ***CONSTRUCTION MODE***. In this mode it is possible to:

- Open the door by entering the factory set **Master Code**, 12345678
- Open the door by holding the **Master Card** up to the RFID reader
- Open the door by holding any **User Card** up to the RFID reader

To exit ***CONSTRUCTION MODE,*** do one of the following:

- **Create a new Master Code** for the keypad (only the new Master Code will open the lock)
- **Create a new User Code** for the keypad (only the new User Code will open the lock)
- **Associate the RFID reader** with the MyEVO lock (only the Master Card will open the lock).

MASTER CARD

The **Master Card** is a single card which is supplied with the CISA MyEVO RFID reader and must be kept very safe by the door administrator.

The **Master Card** has the following functions:

- If the door is locked and the lock is in construction mode, the **Master Card** opens the door
- If the door is locked and the lock is not in construction mode, the **Master Card** does not open the door
- If the door is open and the RFID reader has not yet been associated with the lock, the **Master Card** associates the RFID reader with the lock.
- If the door is open and the RFID reader has been associated with the lock, the **Master Card** activates the programming mode.

Please keep the **Master Card** in a safe place.

ASSOCIATING THE CISA MYEVO RFID READER WITH THE LOCK

⚠ *This must be done with the DOOR OPEN.*

1. Hold the **Master Card** up to the RFID reader

The CISA MyEVO RFID reader is now associated with the lock.

ENABLING A USER CARD OR A MINI USER CARD

⚠ *This must be done with the DOOR OPEN.*

1. Hold the **Master Card** up to the RFID reader
2. Hold the card or the mini card to enable up to the RFID reader

Every time a card or a mini card is held up, the green LED will flash to confirm it has been enabled. Up to 100 cards or mini cards can be enabled. After 10 seconds of inactivity, the yellow LED goes off and programming mode is exited.

OPENING THE DOOR

1. Hold the card or the mini card up to the RFID reader
2. The deadbolts and latchbolt will retract and the door can be opened

If the door is not opened in 10 seconds, it will lock again. It is not possible to deactivate or modify this action.

⚠ *If the yellow and green LEDs flash twice before the door is opened, it means A NEW MASTER CODE MUST BE CREATED (PAGE 25)*

CARDS OR MINI CARDS NOT ENABLED

If the card or mini card is not enabled, the RFID reader emits an error signal

DISABLING A USER CARD OR MINI USER CARD

⚠ *This must be done with the DOOR OPEN.*

1. Hold the **Master Card** up to the RFID reader
2. Hold the **Master Card** up to the RFID reader a second time

3. Hold the card or the mini card to disable up to the RFID reader

Every time a card or a mini card is held up, the green LED will flash to confirm it has been disabled. Several cards or mini cards can be disabled at a time. After 10 seconds of inactivity, the yellow LED goes off and programming mode is exited.

ENABLING A CHANGE OR SAFE CARD

⚠ *This must be done with the DOOR OPEN.*

1. Hold the **Master Card** up to the RFID reader
2. Hold the **Change Card** or the **Safe Card** to be enabled up to the RFID reader

Every time a card is held up, the green LED will flash to confirm it has been enabled. After 10 seconds of inactivity, the yellow LED goes off and programming mode is exited.

USING THE CHANGE CARD

The **Change Card** changes the lock's operating mode. With the **Change Card** it is possible to go from automatic to semi-automatic mode, from semi-automatic to hold open mode or from hold open to automatic mode.

This must be done with the DOOR OPEN.

1. Hold the **Change Card** up to the RFID reader

Every time the **Change Card** is held up, the lock goes to the next mode in this sequence: Automatic->Semi-automatic->Hold open->Automatic.

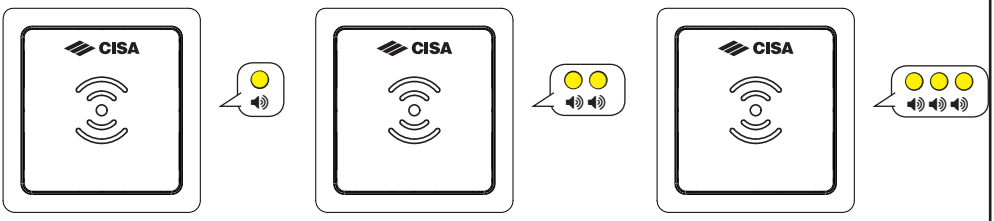

Automatic *Semi-automatic* *Hold open*

A yellow flash and a sound signal indicate the lock is now in automatic mode.
Two yellow flashes and two sound signals indicate the lock is now in semi-automatic mode.
Three yellow flashes and three sound signals indicate the lock is now in hold open mode.

Wait a couple of seconds for the lock to set in the selected mode.

USING THE SAFE CARD

The **Safe Card** disables the CISA MyEVO button and any other device connected through a remote contact.

This operation can be dangerous if not in possession of the key.

By disabling the button and any other device connected through a remote contact, it is only possible to open the door from the inside with the key.
From the outside, however, it is possible to open the door using the **CISA MyEVO keypad** , the **CISA MyEVO RFID reader ,** or the key.

DISABLING

This must be done with the DOOR OPEN.

1. Hold the **Safe Card** up to the RFID reader

RE-ENABLING

This must be done with the DOOR OPEN.

1. Hold the **Safe Card** up to the RFID reader

DISABLING A CHANGE OR SAFE CARD

⚠ *This must be done with the DOOR OPEN.*

1. Hold the **Master Card** up to the RFID reader
2. Hold the **Master Card** up to the RFID reader a second time *flashing*
3. Hold the **Change Card** or the **Safe Card** to be disabled up to the RFID reader

Every time a card or a mini card is held up, the green LED will flash to confirm it has been disabled. Several cards can be disabled at a time. After 10 seconds of inactivity, the yellow LED goes off and programming mode is exited.

DISABLING ALL THE USER CARDS OR MINI USER CARDS, THE CHANGE CARD AND THE SAFE CARD

⚠ *This must be done with the DOOR OPEN.*

1. Hold the **Master Card** up to the RFID reader
2. Hold the **Master Card** up to the RFID reader a second time *flashing*
3. Hold the **Master Card** up to the RFID reader a third time and keep it there for 3 seconds 5

All the **User Cards or mini User Cards** which were enabled are now disabled. This operation also disables any **Change** or **Safe Cards** which may have been enabled.

CLOSING THE DOOR WHEN THE LOCK IS IN SEMI-AUTOMATIC MODE

In semi-automatic mode, when the door is shut only the latchbolt automatically engages, while the deadbolts do not. In this mode, the door can also be opened with just the handle.
It is possible to completely lock the door by engaging the deadbolts as follows.

⚠ *The door must be locked (latchbolt only)*

Hold the User Card or mini **User Card** which is enabled to open the lock up to the RFID reader and keep it there for at least 3 seconds.
During this operation the yellow LED will flash *flashing*
The deadbolts engage and the door is completely locked

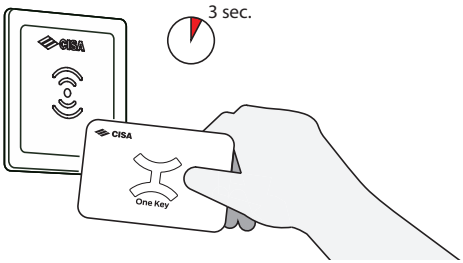

DISSOCIATING THE CISA MYEVO RFID READER FROM THE LOCK AND RESTORING FACTORY SETTINGS

This procedure has the following consequences:

- All the User Cards or mini **User Cards** which were enabled are disabled
- The **Change** or **Safe Cards** which were enabled are disabled
- The RFID reader and the lock are dissociated.

If necessary, the CISA MyEVO RFID reader can now be replaced. If dissociation is not carried out, a new CISA MyEVO RFID reader could not be used.

⚠ *This must be done with the DOOR OPEN.*

⚠ *The **Reset Card** must have the same code as the **Master** Card used to associate the reader with the lock.*

1. Hold the **Reset Card** (red) up to the RFID reader
2. Hold the **Reset Card** (red) up to the RFID reader a second time and keep it there for 3 seconds

Put the **Reset Card** back in a safe place.

WARNING DEAD BATTERIES

When the batteries are dead, every time the lock is activated by either the button or any other external accessory, the yellow LED will light up, it will flash 5 times and a sound signal will be heard. This indicates the batteries are dead and need to be replaced as soon as possible.

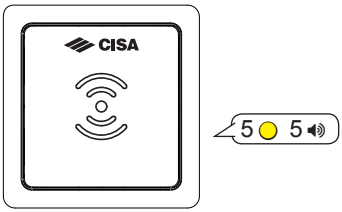

WARNING MALFUNCTION

If there is a mechanical malfunction, the red LED will light up, it will flash 10 times and a sound signal will be heard.

INCORRECT CARD

If a non-coded card or a card with a wrong code is used, the red LED will light up and a sound signal will be heard.

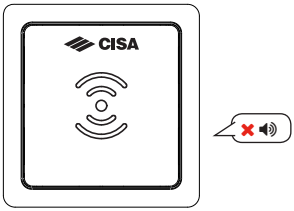

ASSISTANCE AND FAQ

If you have any doubts or queries, visit the page on the CISA website:
cisa.com/myevo

GENERAL INFORMATION

BATTERIES AND CONSUMPTION

When configured with disposable batteries, we recommend using 12 x 1800mAh AA batteries. Lithium batteries are recommended for a longer life.
When configured with batteries (either disposable or rechargeable) and in automatic mode, we recommend you do not leave the door open to keep energy consumption to a minimum.
The lock is equipped with a safety system which is activated when the overall voltage detected in the battery pack is below 12 volts: the lock switches off and does not work electronically. When the dead batteries are replaced with new batteries, normal operation of the lock is restored. This should be kept in mind when the door is being installed on site and especially when rechargeable batteries are used and the door remains open for several days.

REMOTE OPENING

Remote opening requires a power supply. Follow the instructions CONNECTING A REMOTE CONTACT AND THE DOOR STATUS DEVICE (PAGE 11)

CLEANING

Do not use chemical solvents to clean the button, keypad or RFID reader.

REPLACING THE CISA MYEVO RFID READER

If the CISA MyEVO RFID reader has to be replaced, DISSOCIATE IT FROM THE LOCK AND RESTORE FACTORY RESET (PAGE 36)

WARNING DOOR AJAR

If the lock is in automatic mode and the door remains open, an alarm will sound every 30 seconds

FIRMWARE

For information on the characteristics of each version, please consult the CISA website at the following page: **cisa.com/myevo**

ASSISTANCE AND FAQ

If you have any doubts or queries, visit the page on the CISA website:
cisa.com/myevo

CERTIFICATIONS

The product complies with European Directives 2011/65/EU and subsequent updates for the restriction of the use of certain hazardous substances and RED 2014/53/06 and subsequent updates for electromagnetic compatibility.
The product complies with Directive 2014/30/EU.
The product complies with Directive REACH 1907/2006 and subsequent updates.
The products illustrated in this manual have all the technical characteristics which are described in CISA S.p.A. catalogues and are to be used exclusively for the purposes indicated therein.
CISA does not guarantee any performance or technical feature which is not expressly indicated. For specific security requirements, please contact retailers or locksmiths of these products or CISA directly as they will be able to recommend the most suitable product to meet the customer's specific needs.
Please refer to the current CISA price list for sales terms and conditions.

DISPOSAL OF ELECTRIC AND ELECTRONIC COMPONENTS

Pursuant to ITALIAN LEGISLATIVE DECREE No. 49 dated 14 March 2014, "Implementation of Directive 2012/19/EU on waste electrical and electronic equipment (WEEE)", equipment at the end of its life must be disposed of separately from other waste and taken to local waste disposal centres which are authorised to collect waste electrical and electronic equipment (WEEE).
Alternatively, it is possible to take the equipment free of charge to the distributor or retailer when purchasing new equipment or, if it is very small (longest side max 25 cm) without having to make a purchase.
The symbol of the "crossed-out wheelie bin" on equipment and/or its packaging indicates that at the end of its life, the product must be disposed of separately from other waste in order for it to be correctly recycled.
The appropriate separate collection of WEEE helps prevent negative effects on the environment and our health, encouraging the recycling of used material.

CISA S.p.A. reserves the right to make any change to the products illustrated in this catalogue without prior notice.

About Allegion™

Allegion (NYSE: ALLE) is a global pioneer in seamless access, with leading brands like CISA®, Interflex®, LCN®, Schlage®, SimonsVoss® and Von Duprin®. Focusing on security around the door and adjacent areas, Allegion secures people and assets with a range of solutions for homes, businesses, schools and institutions. Allegion had $2.7 billion in revenue in 2018, and sells products in almost 130 countries.

For more, visit **allegion.com**

AXA ■ BRICARD ■ Briton ■ CISA ■ interflex ■ KRYPTONITE ■ NORMBAU ■ SimonsVoss technologies ■ TRELOCK

CISA SpA
Via Oberdan 42
48018 Faenza (RA) Italy

Customer Service and Technical Support
+39 0546 188 0070

Ph. +39 0546 677111
Fax +39 0546 677150

cisa.com
cisa.sales@allegion.com

ALLEGION

0892069400000/B